Schmidlin™

Schmidlin CORSO

72 x 36 x 17 ⅝ inch

Article No: 2141-0003

Material

- Glazed titanium steel

Features

- ANTIGLISS included alcove

Compatible drain fittings

- Geberit offset, PP 150.183.00.1 (rough-in unit) alcove
- Mountain Plumbing offset, brass BDR20SBR45/FFF (cable drive) alcove
- OS&B direct, brass 307DQ-30FFF (clicker) alcove
- OS&B offset, brass 314Q15-20FFF (clicker) alcove
- OS&B offset, PVC 5100QK-FFF (clicker) alcove



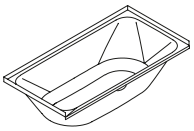

Variant no	Color	Tile flange
☐ 2141-0002	C1 white gloss	TF00 no tile flange
☐ 2141-0005	C1 white gloss	TF06 tile flanges on 2 sides, left corner
☐ 2141-0006	C1 white gloss	TF07 tile flanges on 2 sides, right corner

Colors

- ☐ C058 White matte
- ☐ C___ Color class III, VI

↗ color list

Options

- ☐ CE1 CLEANEFFECT
- ☐ HC1 Handle CONTURA
- ☐ HS1 Handle SAFE

Accessories

☐ 109547	Schmidlin ELEMENT, magnetic candle holder
☐ 101187	Schmidlin RELAX bathtub pillow, black, 1 piece
☐ 117005	Schmidlin 2-corner tape-flange, 155" (4m)
☐ 110404	Schmidlin adjustable installation feet for RIVA / CORSO (4 pieces)
☐ 101196	Schmidlin mounting angle for tile flange (SIA 181), 4 pieces

11/24/2026 Subject to technical changes.

Wilhelm Schmidlin AG
Oberarth, Switzerland
info@schmidlinusa.com
www.schmidlinusa.com

Schmidlin™

Schmidlin CORSO

72 x 36 x 17 ⅝ inch
Article No: 2141-0003

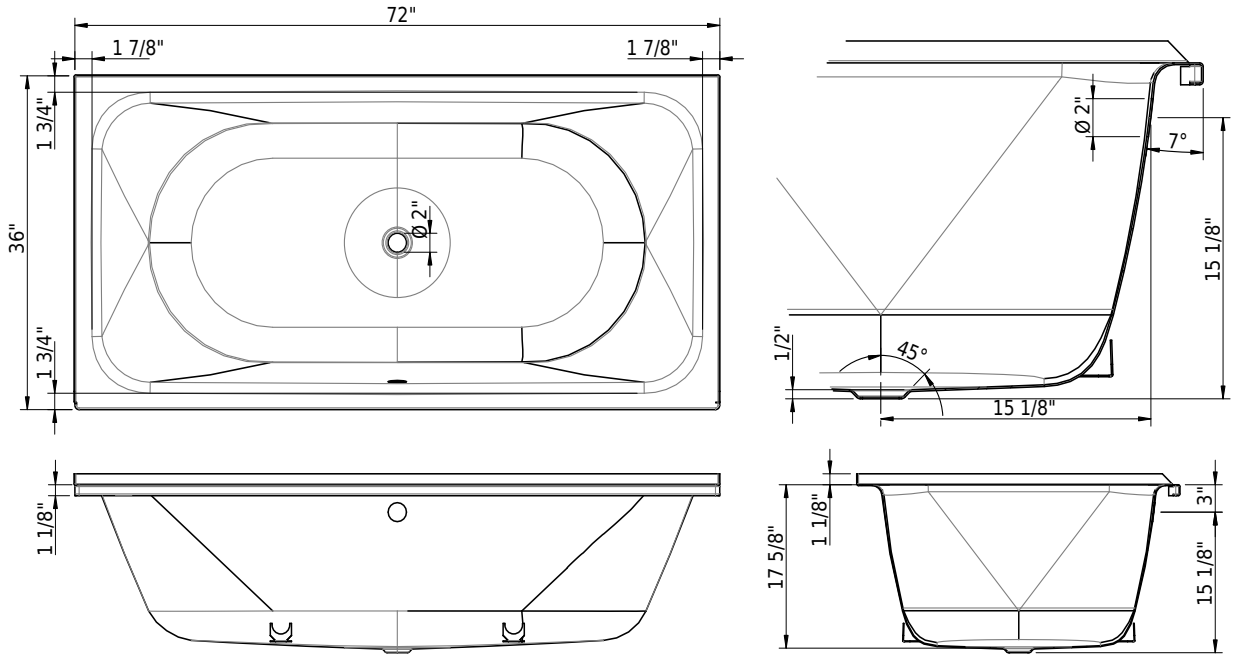

Technical Information

Installation location	alcove
Weight without water	135 lbs
Water depth to overflow	13 1/2"
Max. water capacity to overflow	82 gal
Drain opening	2"
Overflow hole diameter	2"

↗ Installation Instructions

Standards / Codes

- This product complies with alcove
- ASME A112.19.1 / CSA B45.2 alcove
- ASTM F462 alcove
- ADA alcove

Notes

- Bath faucet not included alcove
- Refer to installation instructions alcove
- We recommend the use of Schmidlin adjustable installation feet alcove

Important: Dimensions of fixtures are nominal and may vary within the range tolerances established by ANSI standard A112.19.4. These measurements are subject to change or cancellation. No responsibility is assumed for use of superseded or voided leaflet.

individually swiss made

Wilhelm Schmidlin AG
Oberarth, Switzerland
info@schmidlinusa.com
www.schmidlinusa.com