Schmidlin™

Schmidlin NORM

70 x 32 x 17 ¾ inch
Article No: 2184-0006

Material

- Glazed titanium steel



Features

- ANTIGLISS included corner
- Integrated tile flanges corner
- Option made to measure corner

Compatible drain fittings

- Geberit offset, ABS 151.602.21.1 (polished chrome) corner
- Geberit offset, PP 150.183.00.1 (rough-in unit) corner
- Geberit offset, brass 151.450.00.1 (rough-in unit) corner
- Mountain Plumbing offset, brass BDR20SBR22/FFF (cable drive) corner
- Mountain Plumbing offset, ABS BWO40S22A2/FFF (cable drive) corner
- Mountain Plumbing offset, PVC BWO40S22P2/FFF (cable drive) corner
- OS&B direct, brass 307DQ-25FFF (clicker) corner
- OS&B offset, PVC 5100QK-FFF (clicker) corner
- Jaco offset, brass 386-LT (cable-drive) corner
- Jaco offset, PVC 383-LT (cable-drive) corner

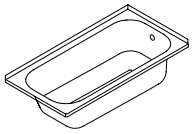

ADA Compliant

UPC

Variant no	Color	Tile flange	
☐ 2184-0002	C1 white gloss	TF00 no tile flange	
☐ 2184-0003	C1 white gloss	TF01 Tile flange on 3 sides, drain left	
☐ 2184-0004	C1 white gloss	TF02 Tile flange on 3 sides, drain right	
☐ 2184-0005	C1 white gloss	TF03 Tile flanges left / back, drain left	
☐ 2184-0006	C1 white gloss	TF04 Tile flanges right / back, drain right	

Colors

- ☐ C058 White matte
- ☐ C___ Color class III,VI

↗ color list

Options

- ☐ CE1 CLEANEFFECT
- ☐ HC2 Handle CONTURA
- ☐ HS2 Handle SAFE
- ☐ Special length / width -1″/+2″

Accessories

☐ 109547	Schmidlin ELEMENT, magnetic candle holder
☐ 101187	Schmidlin RELAX bathtub pillow, black, 1 piece
☐ 117005	Schmidlin 2-corner tape-flange, 155" (4m)
☐ 109810	Schmidlin adjustable installation feet (4 pieces)
☐ 101196	Schmidlin mounting angle for tile flange (SIA 181), 4 pieces

11/24/2026 Subject to technical changes.

Wilhelm Schmidlin AG
Oberarth, Switzerland
info@schmidlinusa.com
www.schmidlinusa.com

Schmidlin™

Schmidlin NORM

70 x 32 x 17 ¾ inch
Article No: 2184-0006

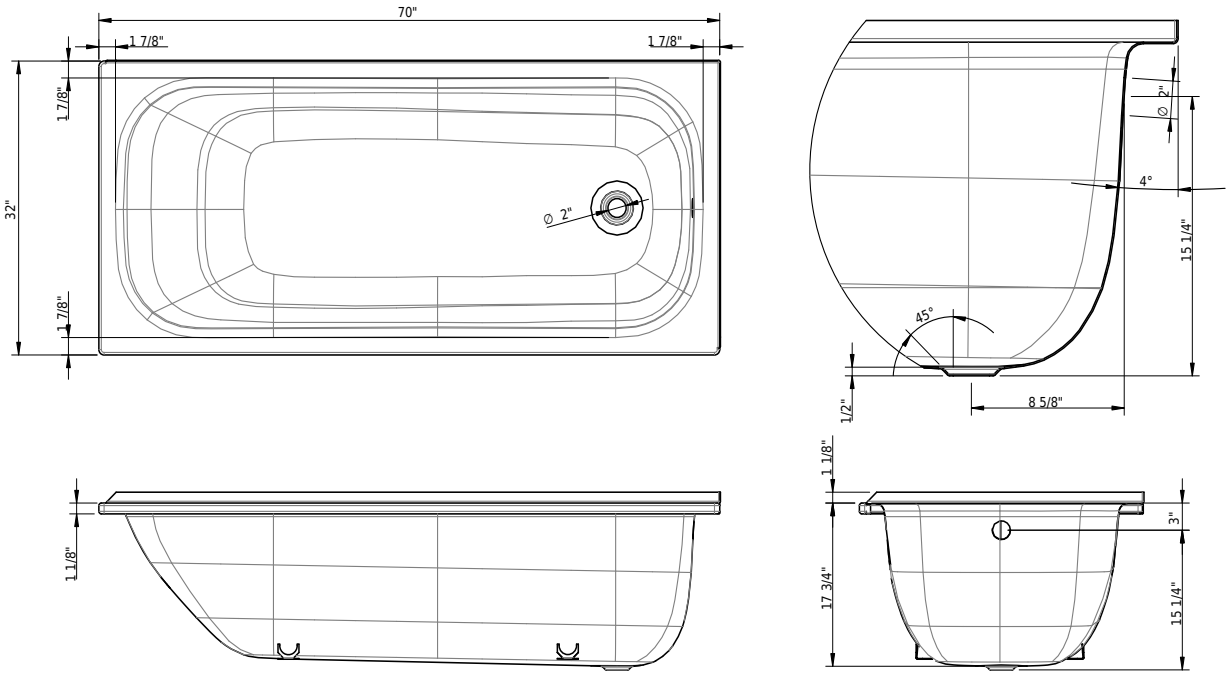

Technical Information

Installation location	corner
Weight without water	126 lbs
Water depth to overflow	corner
Max. water capacity to overflow	65 gal
Drain opening	2"
Overflow hole diameter	2"

↗ Installation Instructions

Standards / Codes

- This product complies with corner
- ASME A112.19.1 / CSA B45.2 corner
- ASTM F462 corner
- ADA corner

ADA Compliant

Meets the americans with disabilities act guidelines and ANSI A117.1 requirements for accessibility and usability - check local code. Install with seat at head end.

Notes

- Right hand outlet shown corner
- Bath faucet not included corner
- Refer to installation instructions corner
- We recommend the use of Schmidlin adjustable installation feet corner

Important: Dimensions of fixtures are nominal and may vary within the range tolerances established by ANSI standard A112.19.4. These measurements are subject to change or cancellation. No responsibility is assumed for use of superseded or voided leaflet.

11/24/2026 Subject to technical changes.

Wilhelm Schmidlin AG
Oberarth, Switzerland
info@schmidlinusa.com
www.schmidlinusa.com