Schmidlin URBAN CLASSIC

60 x 30 x 16 inch
Article No: 2300-0004



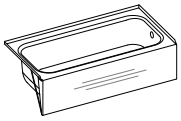

ADA Compliant

UPC

Material

- Glazed titanium steel

Features

- ANTIGLISS included
- Integrated tile flanges

Compatible drain fittings

- Mountain Plumbing offset, brass BDR20SBR22/FFF (cable drive)
- Mountain Plumbing offset, brass BDWUNV22/FFF (toe touch)
- Mountain Plumbing offset, ABS BWO40S22A2/FFF (cable drive)
- Mountain Plumbing offset, ABS BDWUNVA/FFF (toe touch)
- Mountain Plumbing offset, PVC BWO40S22P2/FFF (cable drive)
- Mountain Plumbing offset, PVC BDWUNVP/FFF (toe touch)
- OS&B offset, brass 314Q12-20FFF (clicker)
- OS&B offset, ABS 6040QK-FFF (clicker)
- OS&B offset, PVC 5150QK-FFF (clicker)
- Gerber direct, brass G004185135 Lift & Turn, 17 Gauge
- Gerber offset, brass G004181235 Trip Lever, 17 Gauge
- Gerber offset, brass G004181835 Trip Lever, 20 Gauge
- Gerber offset, brass G004185535 Lift & Turn , 20 Gauge
- Gerber offset ABS G0041613 Trip Lever
- Gerber offset PVC G0041553 Lift & Turn
- Geberit offset, PP 150.183.00.1 (rough-in unit)
- Geberit offset, brass 151.450.00.1 (rough-in unit)
- Central Brass offset, brass 1655-X1817 (cable drive)
- Watco offset, brass 501/502 - NY EX4 D4
- Watco offset, brass 528 D2 (cable drive)
- Watco offset, brass 591 EX4 D4
- Watco offset, ABS/PVC 900 EX2 D3
- Watco offset, ABS/PVC 916 D4
- Watco offset, ABS/PVC 938 (cable drive)
- Jaclo offset, brass 386-LT (cable drive)
- Jaclo offset, PVC 383-LT (cable drive)

Variant no	Color	Tile flange	
☐ 2300-0003	C1 white gloss	TF01 Tile flanges left / back, drain left	
☐ 2300-0004	C1 white gloss	TF02 Tile flanges right / back, drain right	

11/24/2026 Subject to technical changes.

Wilhelm Schmidlin AG
Oberarth, Switzerland
info@schmidlinusa.com
www.schmidlinusa.com

Schmidlin™

Schmidlin URBAN CLASSIC

60 x 30 x 16 inch
Article No: 2300-0004

Colors

- ☐ C058 White matte
- ☐ C___ Color class III, VI

↗ color list

Accessories

☐ 108240	Schmidlin ELEMENT magnetic towel holder, chrome-plated
☐ 109547	Schmidlin ELEMENT, magnetic candle holder
☐ 101187	Schmidlin RELAX bathtub pillow, black, 1 piece
☐ 117005	Schmidlin 2-corner tape-flange, 155" (4m)

Options

- ☐ CE1 CLEANEFFECT
- ☐ HC2 Handle CONTURA
- ☐ HS2 Handle SAFE

11/24/2026 Subject to technical changes.

Wilhelm Schmidlin AG
Oberarth, Switzerland
info@schmidlinusa.com
www.schmidlinusa.com

Schmidlin URBAN CLASSIC

60 x 30 x 16 inch
Article No: 2300-0004

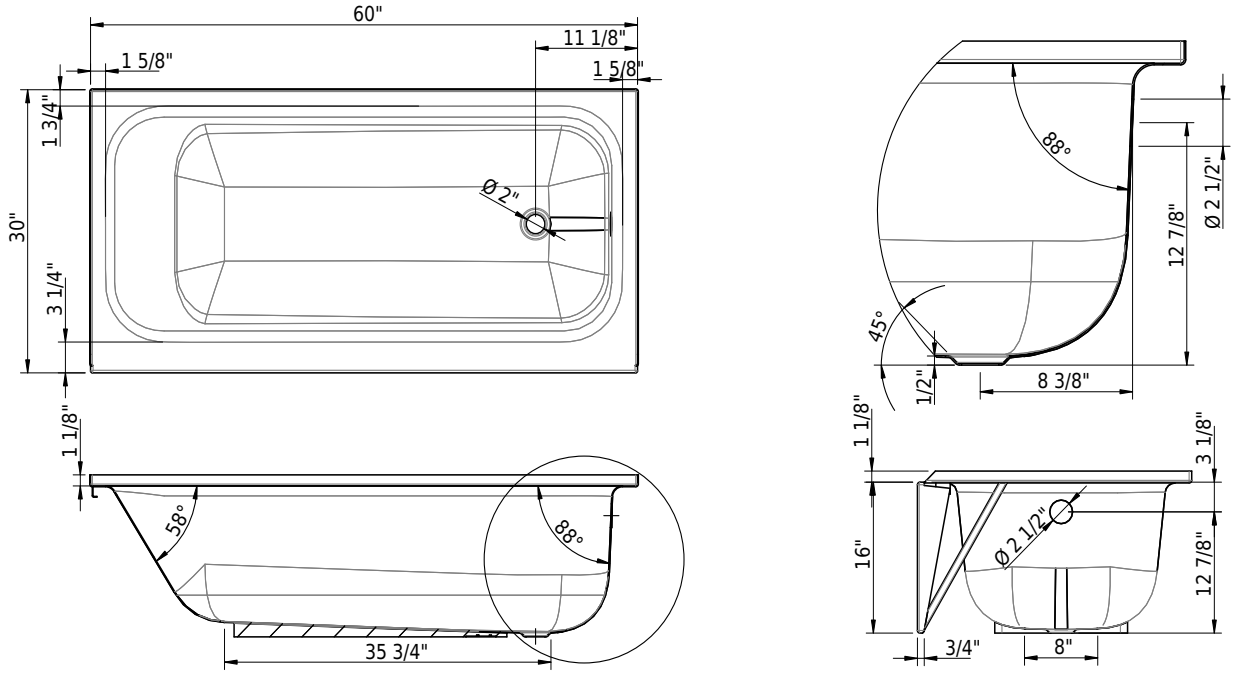

Technical Information

Installation location	alcove
Weight without water	115 lbs
Water depth to overflow	11 1/2"
Max. water capacity to overflow	42 gal
Drain opening	2"
Overflow hole diameter	2 1/2"

↗ Installation Instructions

↗ Installation Video

Standards / Codes

- This product complies with
- ASME A112.19.1 / CSA B45.2
- ASTM F462
- ADA

ADA Compliant

Meets the americans with disabilities act guidelines and ANSI A117.1 requirements for accessibility and usability - check local code. Install with seat at head end.

Notes

- Right hand outlet shown
- Bath faucet not included
- Refer to installation instructions

Important: Dimensions of fixtures are nominal and may vary within the range tolerances established by ANSI standard A112.19.4. These measurements are subject to change or cancellation. No responsibility is assumed for use of superseded or voided leaflet.

11/24/2026 Subject to technical changes.

Wilhelm Schmidlin AG
Oberarth, Switzerland
info@schmidlinusa.com
www.schmidlinusa.com