Schmidlin™

Schmidlin IRIS

inch

Article No: 2427-0001



Material

- Glazed titanium steel

Features

Colors

- ☐ C058 White matte
- ☐ C003 Black matte
- ☐ C___ Other gloss colors

↗ color list

Options

- ☐ CE1 CLEANEFFECT

Accessories

11/25/2026 Subject to technical changes.

Wilhelm Schmidlin AG
Oberarth, Switzerland
info@schmidlinusa.com
www.schmidlinusa.com

Schmidlin™

Schmidlin IRIS

inch

Article No: 2427-0001

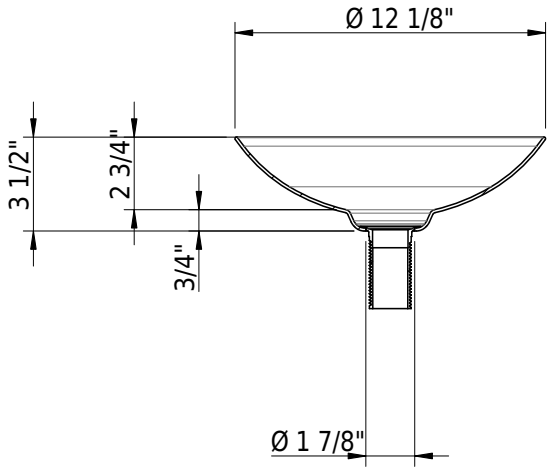

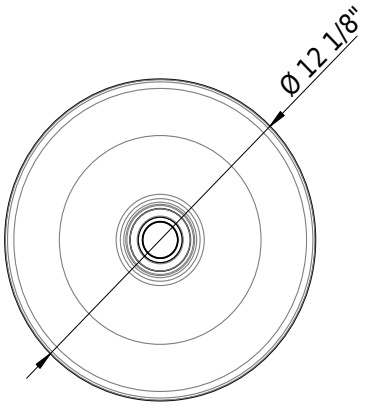

Technical Information

Standards / Codes

Important: Dimensions of fixtures are nominal and may vary within the range tolerances established by ANSI standard A112.19.4. These measurements are subject to change or cancellation. No responsibility is assumed for use of superseded or voided leaflet.

Wilhelm Schmidlin AG
Oberarth, Switzerland
info@schmidlinusa.com
www.schmidlinusa.com