Schmidlin™

Schmidlin NORM

72 x 32 x 17 ¾ inch
Article No: 2490-0003

Material

- Glazed titanium steel

Features

- ANTIGLISS included
- Option made to measure



Compatible drain fittings

- Geberit offset, ABS 151.602.21.1 (polished chrome)
- Geberit offset, PP 150.183.00.1 (rough-in unit)
- Geberit offset, brass 151.450.00.1 (rough-in unit)
- Mountain Plumbing offset, brass BDR20SBR22/FFF (cable drive)
- Mountain Plumbing offset, ABS BWO40S22A2/FFF (cable drive)
- Mountain Plumbing offset, PVC BWO40S22P2/FFF (cable drive)
- OS&B direct, brass 307DQ-25FFF (clicker)
- OS&B offset, PVC 5100QK-FFF (clicker)
- Jaco offset, brass 386-LT (cable-drive)
- Jaco offset, PVC 383-LT (cable-drive)

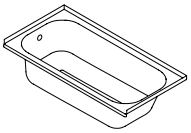

Variant no	Color	Tile flange
☐ 2490-0002	C1 white gloss	TF00 no tile flange
☐ 2490-0003	C1 white gloss	TF01 Tile flange on 3 sides, drain left
☐ 2490-0004	C1 white gloss	TF02 Tile flange on 3 sides, drain right
☐ 2490-0005	C1 white gloss	TF03 Tile flanges left / back, drain left
☐ 2490-0006	C1 white gloss	TF04 Tile flanges right / back, drain right

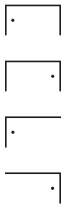

Colors

- ☐ C058 White matte
- ☐ C___ Color class III,VI

↗ color list

Options

- ☐ CE1 CLEANEFFECT
- ☐ HS1 Handle SAFE

Accessories

☐ 109547	Schmidlin ELEMENT, magnetic candle holder
☐ 101187	Schmidlin RELAX bathtub pillow, black, 1 piece
☐ 117005	Schmidlin 2-corner tape-flange, 155" (4m)
☐ 109810	Schmidlin adjustable installation feet (4 pieces)
☐ 101196	Schmidlin mounting angle for tile flange (SIA 181), 4 pieces

11/24/2026 Subject to technical changes.

Schmidlin™

Schmidlin NORM

72 x 32 x 17 ¾ inch
Article No: 2490-0003

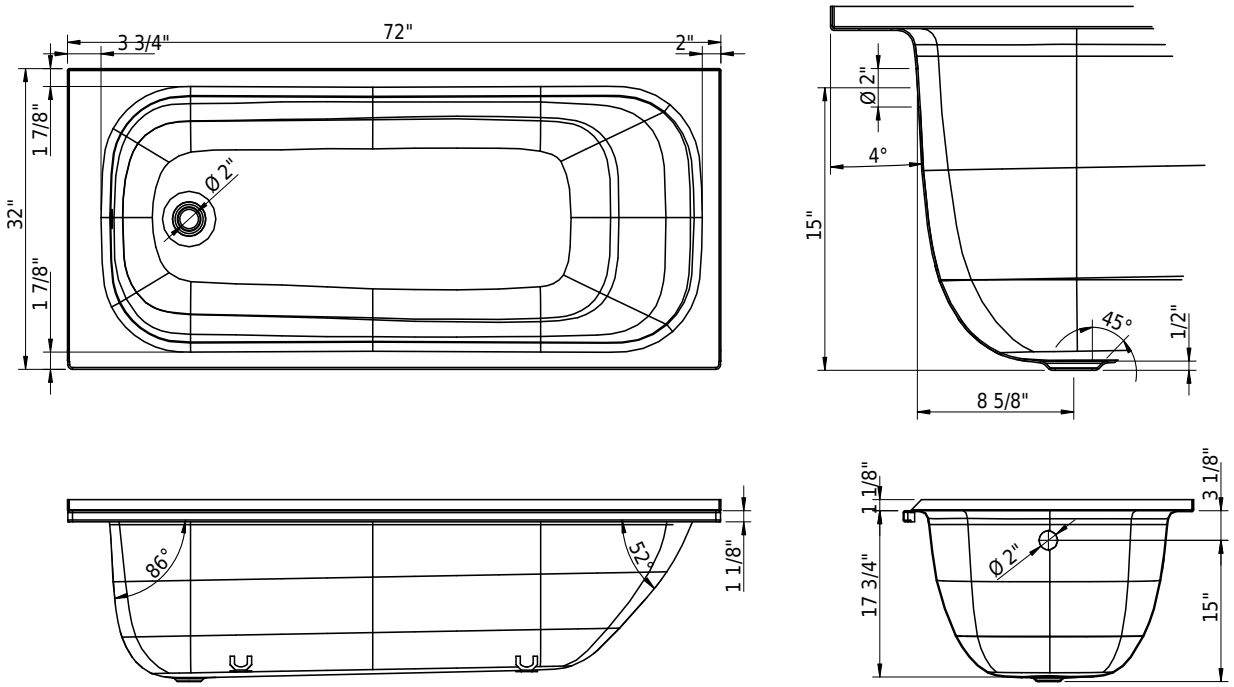

Technical Information

Installation location	alcove
Weight without water	130 lbs
Water depth to overflow	13 1/2"
Max. water capacity to overflow	60 gal
Drain opening	2"
Overflow hole diameter	2"

↗ Installation Instructions

Standards / Codes

- This product complies with
- ASME A112.19.1 / CSA B45.2
- ASTM F462
- ADA

Notes

- Bath faucet not included
- Refer to installation instructions
- We recommend the use of Schmidlin adjustable installation feet

Important: Dimensions of fixtures are nominal and may vary within the range tolerances established by ANSI standard A112.19.4. These measurements are subject to change or cancellation. No responsibility is assumed for use of superseded or voided leaflet.

11/24/2026 Subject to technical changes.

Wilhelm Schmidlin AG
Oberarth, Switzerland
info@schmidlinusa.com
www.schmidlinusa.com