Schmidlin™

# Schmidlin NORM

71 x 32 x 17 ¾ inch
Article No: 2503-0002

## Material

- Glazed titanium steel

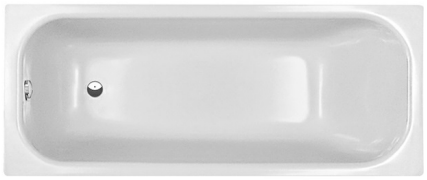

## Features

- ANTIGLISS included
- Option made to measure

## Compatible drain fittings

- Geberit offset, ABS 151.602.21.1 (polished chrome)
- Geberit offset, PP 150.183.00.1 (rough-in unit)
- Geberit offset, brass 151.450.00.1 (rough-in unit)
- Mountain Plumbing offset, brass BDR20SBR22/FFF (cable drive)
- Mountain Plumbing offset, ABS BWO40S22A2/FFF (cable drive)
- Mountain Plumbing offset, PVC BWO40S22P2/FFF (cable drive)
- OS&B direct, brass 307DQ-25FFF (clicker)
- OS&B offset, PVC 5100QK-FFF (clicker)
- Jaco offset, brass 386-LT (cable-drive)
- Jaco offset, PVC 383-LT (cable-drive)

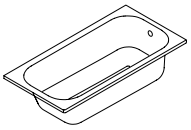

| Variant no | Color | Tile flange |
|---|---|---|
| ☐ 2503-0002 | C1 white gloss | TF00 no tile flange |
| ☐ 2503-0003 | C1 white gloss | TF01 Tile flange on 3 sides, drain left |
| ☐ 2503-0004 | C1 white gloss | TF02 Tile flange on 3 sides, drain right |
| ☐ 2503-0005 | C1 white gloss | TF03 Tile flanges left / back, drain left |
| ☐ 2503-0006 | C1 white gloss | TF04 Tile flanges right / back, drain right |







11/24/2026 Subject to technical changes.



Wilhelm Schmidlin AG
Oberarth, Switzerland
info@schmidlinusa.com
www.schmidlinusa.com

Schmidlin™

# Schmidlin NORM

71 x 32 x 17 ¾ inch

Article No: 2503-0002

## Colors

- ☐ C058 White matte
- ☐ C___ Color class III,VI

↗ color list

## Options

- ☐ CE1 CLEANEFFECT
- ☐ HC2 Handle CONTURA
- ☐ HS2 Handle SAFE
- ☐ Special length / width -1″/+2″
- ☐ TF__ Tile flange

## Accessories

| | |
|---|---|
| ☐ 109547 | Schmidlin ELEMENT, magnetic candle holder |
| ☐ 101187 | Schmidlin RELAX bathtub pillow, black, 1 piece |
| ☐ 117005 | Schmidlin 2-corner tape-flange, 155" (4m) |
| ☐ 109810 | Schmidlin adjustable installation feet (4 pieces) |
| ☐ 101196 | Schmidlin mounting angle for tile flange (SIA 181), 4 pieces |

11/24/2026 Subject to technical changes.



Wilhelm Schmidlin AG
Oberarth, Switzerland
info@schmidlinusa.com
www.schmidlinusa.com

Schmidlin™

# Schmidlin NORM

71 x 32 x 17 ¾ inch
Article No: 2503-0002

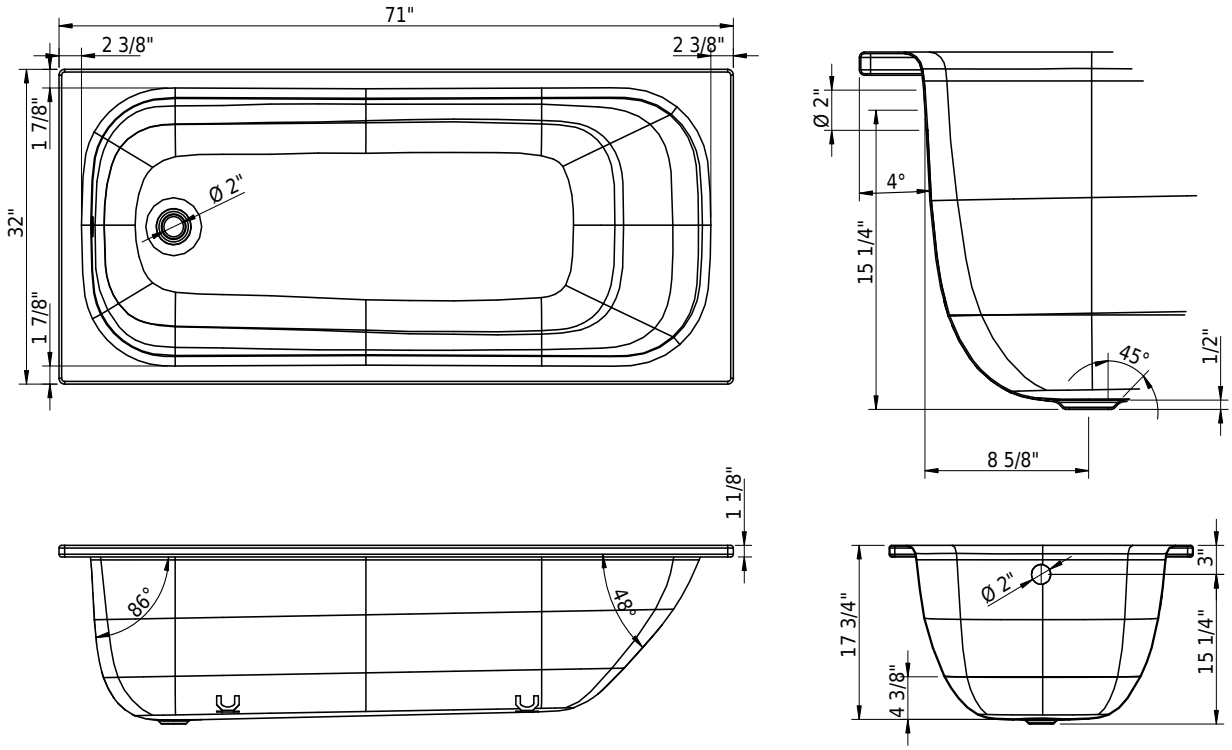


## Technical Information

| | |
|---|---|
| Installation location | drop in/undermount/alcove/corner |
| Weight without water | 97 lbs |
| Water depth to overflow | 13 3/4" |
| Max. water capacity to overflow | 69 gal |
| Drain opening | 2" |
| Overflow hole diameter | 2" |

↗ Installation Instructions

## Standards / Codes

- This product complies with
- ASME A112.19.1 / CSA B45.2
- ASTM F462
- ADA

## Notes

- Bath faucet not included
- Refer to installation instructions
- We recommend the use of Schmidlin adjustable installation feet

**Important:** Dimensions of fixtures are nominal and may vary within the range tolerances established by ANSI standard A112.19.4. These measurements are subject to change or cancellation. No responsibility is assumed for use of superseded or voided leaflet.

11/24/2026 Subject to technical changes.



Wilhelm Schmidlin AG
Oberarth, Switzerland
info@schmidlinusa.com
www.schmidlinusa.com