Schmidlin™

Schmidlin NORM CLASSIC

60 x 32 x 17 ⅜ inch
Article No: 2576-0002

Material

- Glazed titanium steel

Features

- ANTIGLISS included
- Integrated tile flanges
- Option made to measure

Compatible drain fittings

- Geberit offset, ABS 151.602.21.1 (polished chrome)
- Geberit offset, PP 150.183.00.1 (rough-in unit)
- Geberit offset, brass 151.450.00.1 (rough-in unit)
- Mountain Plumbing offset, brass BDR20SBR22/FFF (cable drive)
- Mountain Plumbing offset, ABS BWO40S22A2/FFF (cable drive)
- Mountain Plumbing offset, PVC BWO40S22P2/FFF (cable drive)
- OS&B direct, brass 314DQ-20FFF (clicker)
- OS&B offset, PVC 5100QK-FFF (clicker)
- Jaclo offset, brass 386-LT (cable drive)
- Jaclo offset, PVC 383-LT (cable drive)

Variant no	Color	Tile flange	
☐ 2576-0002	C1 white gloss	TF00 no tile flange	
☐ 2576-0003	C1 white gloss	TF01 Tile flange on 3 sides, drain left	
☐ 2576-0004	C1 white gloss	TF02 Tile flange on 3 sides, drain right	
☐ 2576-0005	C1 white gloss	TF03 Tile flanges left / back, drain left	
☐ 2576-0006	C1 white gloss	TF04 Tile flanges right / back, drain right	

11/23/2026 Subject to technical changes.

Wilhelm Schmidlin AG
Oberarth, Switzerland
info@schmidlinusa.com
www.schmidlinusa.com

Schmidlin™

Schmidlin NORM CLASSIC

60 x 32 x 17 ⅜ inch

Article No: 2576-0002

Colors

- ☐ C058 White matte
- ☐ C___ Color class III,VI

↗ color list

Options

- ☐ CE1 CLEANEFFECT
- ☐ HC1 Handle CONTURA
- ☐ HC2 Handle CONTURA
- ☐ HS1 Handle SAFE
- ☐ HS2 Handle SAFE
- ☐ Special length / width -1″/+2″
- ☐ TF__ Tile flange

Accessories

☐ 109547	Schmidlin ELEMENT, magnetic candle holder
☐ 101187	Schmidlin RELAX bathtub pillow, black, 1 piece
☐ 1610-0005	60” apron (glazed titanium steel) for installation Above Floor Rough in alcove only, C001
☐ 1610-0001	60” apron (glazed titanium steel) for installation in alcove only, C001
☐ 1610-0004	60” apron (glazed titanium steel) for installation in alcove only, C003
☐ 1610-0003	60” apron (glazed titanium steel) for installation in alcove only, C058
☐ 1610-0002	60” apron (glazed titanium steel) for installation in alcove only, C062
☐ 117005	Schmidlin 2-corner tape-flange, 155" (4m)
☐ 109810	Schmidlin adjustable installation feet (4 pieces)
☐ 116450	Schmidlin adjustable installation feet for Above floor Rough (4 pieces)
☐ 109809	Schmidlin magnetic installation brackets for apron (2 pieces)
☐ 101196	Schmidlin mounting angle for tile flange (SIA 181), 4 pieces
☐ 111020	Set of 60” apron, 4 adjustable feet, 2 magnetic brackets for Norm Classic 60", C001

11/23/2026 Subject to technical changes.

Wilhelm Schmidlin AG
Oberarth, Switzerland
info@schmidlinusa.com
www.schmidlinusa.com

Schmidlin™

Schmidlin NORM CLASSIC

60 x 32 x 17 ⅜ inch
Article No: 2576-0002

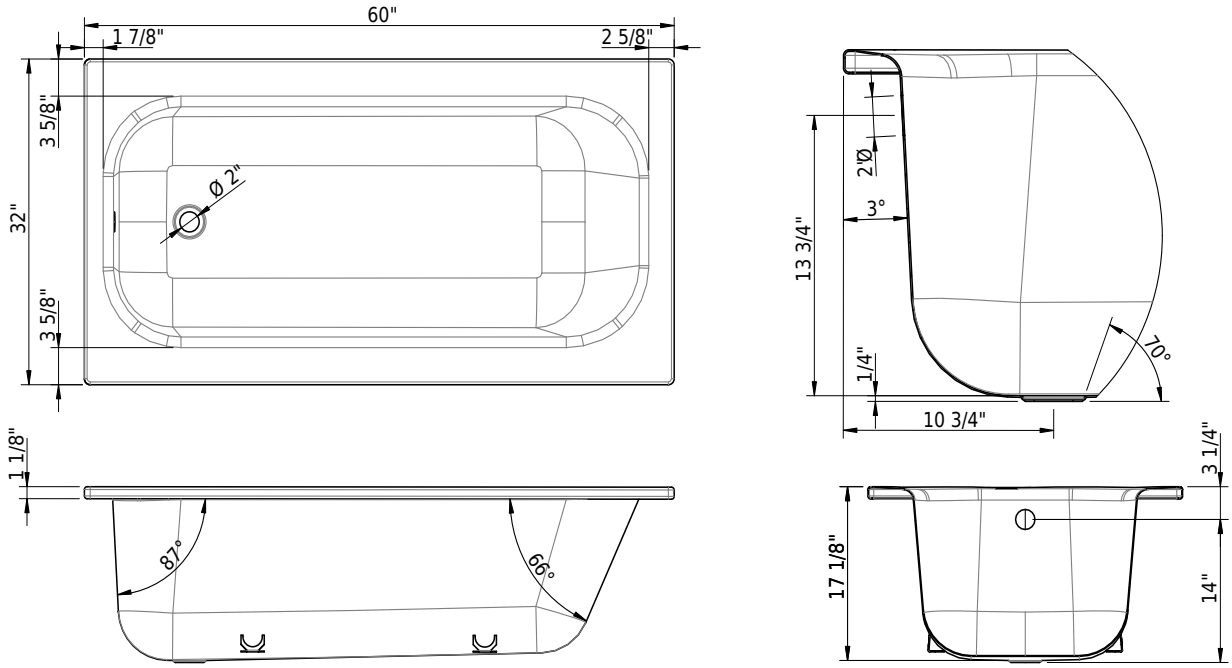

Technical Information

Installation location	drop in/undermount/alcove/corner
Weight without water	tbd
Water depth to overflow	12 3/4"
Max. water capacity to overflow	53 gal
Drain opening	2"
Overflow hole diameter	2"

↗ Installation Instructions

Standards / Codes

- This product complies with
- ASME A112.19.1 / CSA B45.2
- ASTM F462
- ADA

Notes

- Right hand outlet shown
- Bath faucet not included
- Refer to installation instructions
- We recommend the use of Schmidlin adjustable installation feet

Important: Dimensions of fixtures are nominal and may vary within the range tolerances established by ANSI standard A112.19.4. These measurements are subject to change or cancellation. No responsibility is assumed for use of superseded or voided leaflet.

Wilhelm Schmidlin AG
Oberarth, Switzerland
info@schmidlinusa.com
www.schmidlinusa.com