cut view A-A

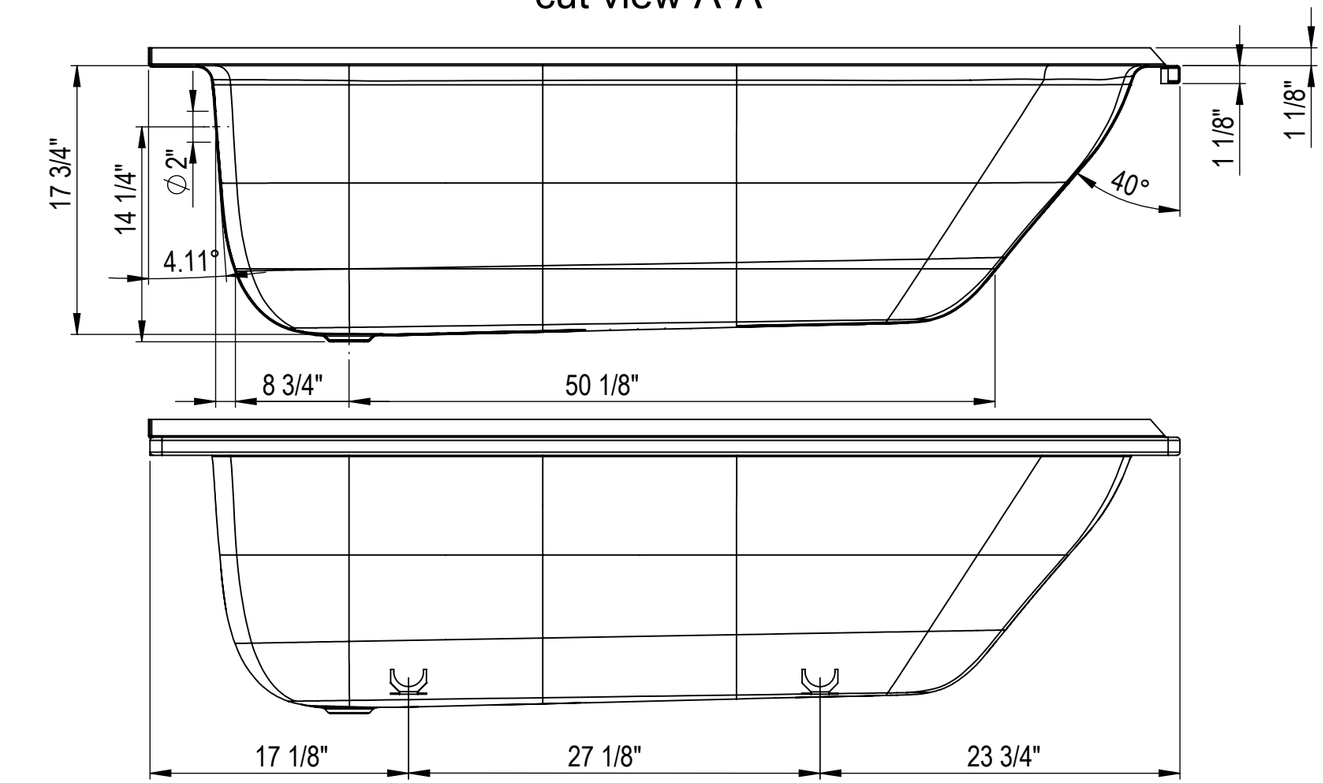

cut view B-B

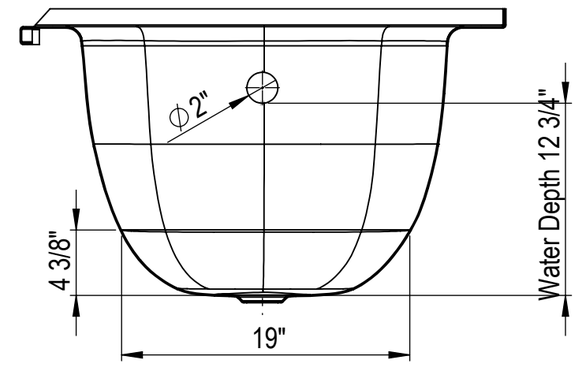

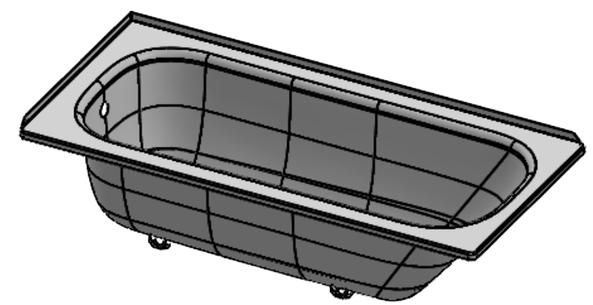

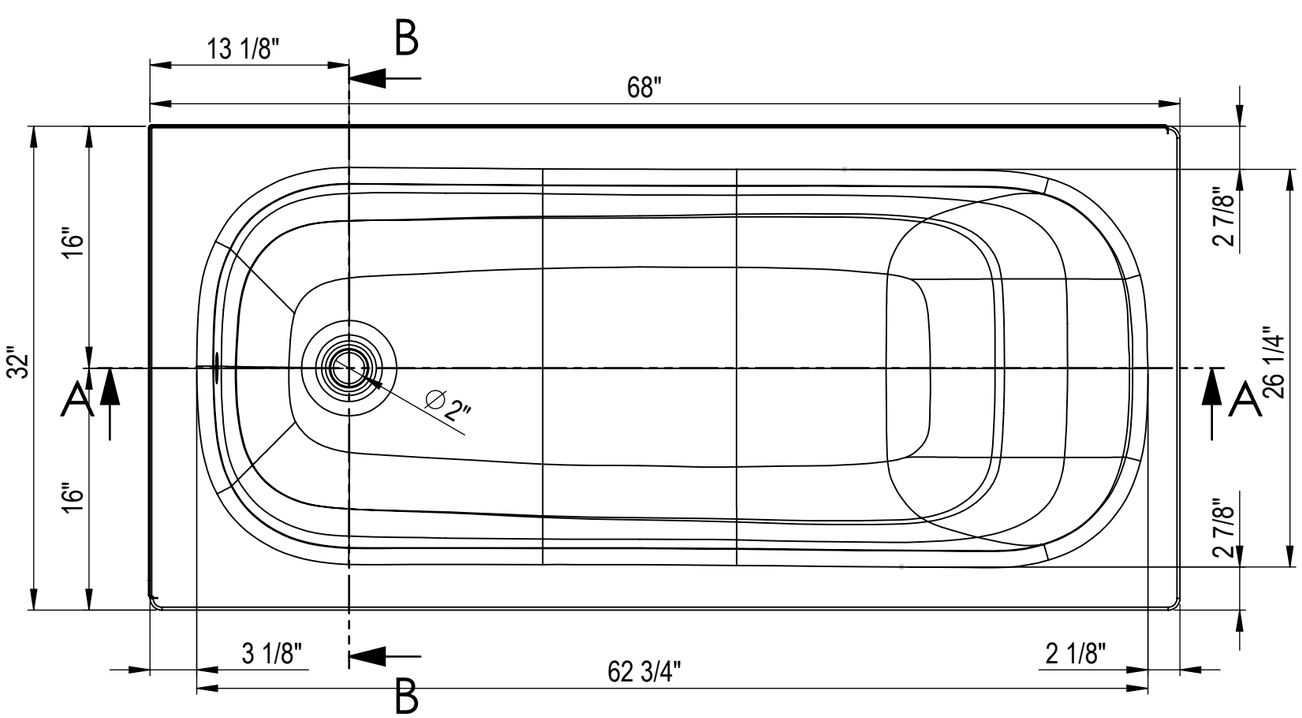

All products are made in the same factory with the same processes.
The steel grade and surface materials are identical.

Change	-	-	Change	-	-	replaced by	16.02.2023	OM	
	-	-		-	-			-	
	-	-		-	-			-	
	-	-		-	-				

Item no.	2228-0005	Scale			
release		1:20		Format	Sheet/Sheets
Order no.				A	7 / 9

Schmidlin
www.schmidlinusa.com

Schmidlin NORM

68"x32", Tile Flange Left/Back, Drain Left

Drawing no. 01.4.0004218 Version

Plotdatum: 03.03.2023

CAD-System: SolidWorks

We reserves all rights in this document and it's subject matter. The recipient herby acknowledges these rights and assures the use of this document only for the purpose it was delivered. © Wilhelm Schmidlin AG