cut view A-A

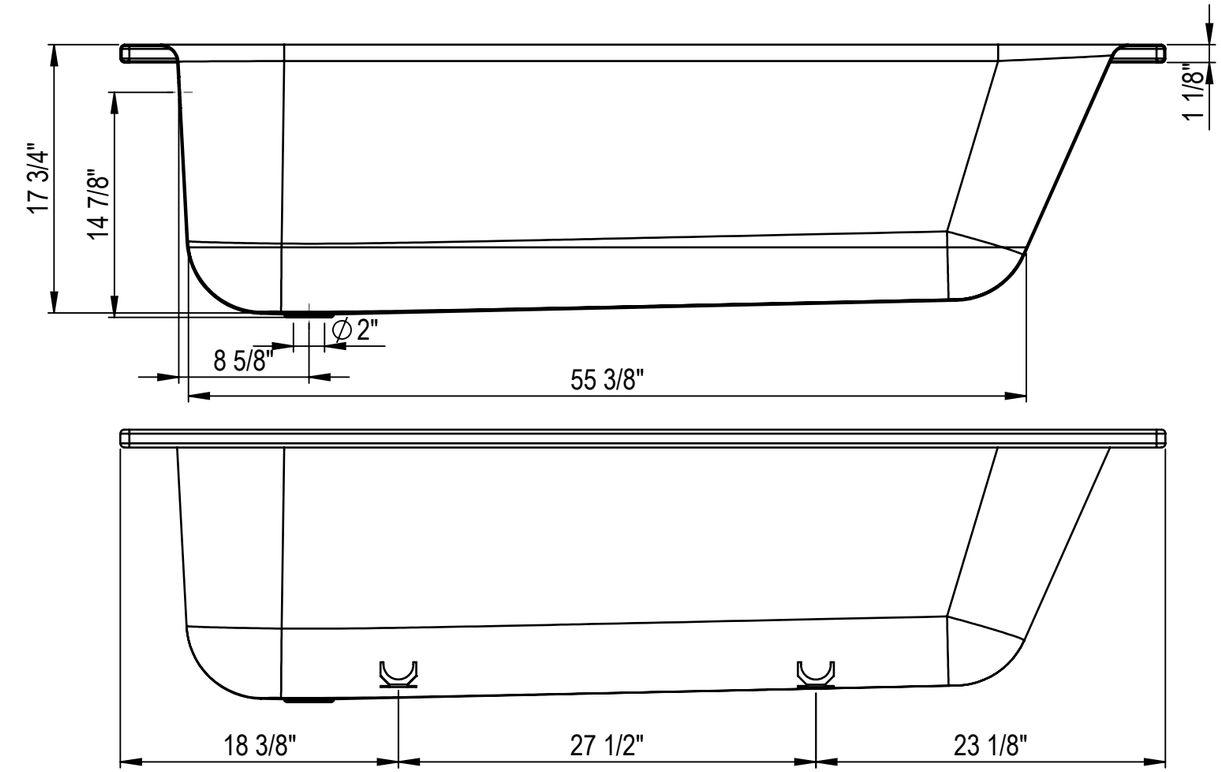

cut view B-B

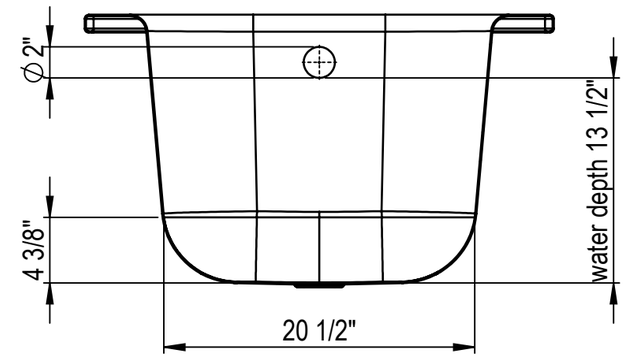

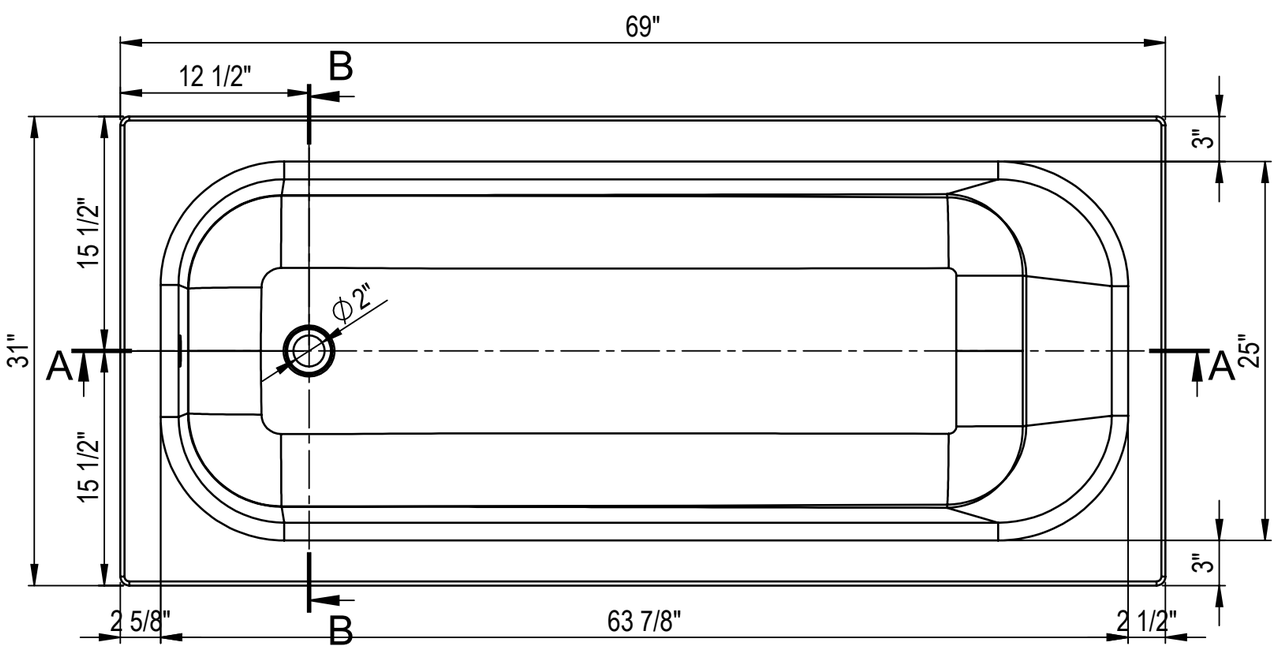

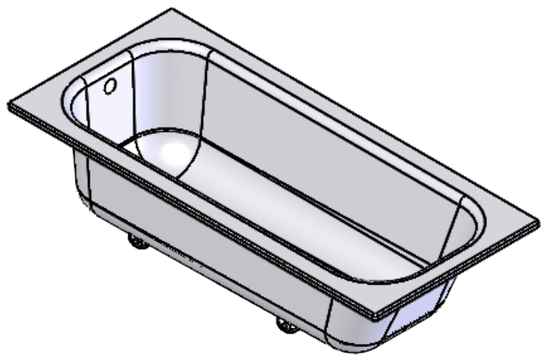

All products are made in the same factory with the same processes.
The steel grade and surface materials are identical.

Change	-	-	Change	-	-	replaced by	28.02.2023	LB
	-	-		-	-			-
	-	-		-	-			-
	-	-		-	-			

Item no.	2247-0002		Scale		
release			1:10	Format	Sheet/Sheets
Order no.				A	1 / 9

Schmidlin
www.schmidlinusa.com

Schmidlin NORM
69"x31"

Drawing no. 01.4.0004239 Version

Plotdatum: 01.03.2023

CAD-System: SolidWorks

We reserves all rights in this document and it's subject matter. The recipient herby acknowledges these rights and assures the use of this document only for the purpose it was delivered. © Wilhelm Schmidlin AG