cut view A-A

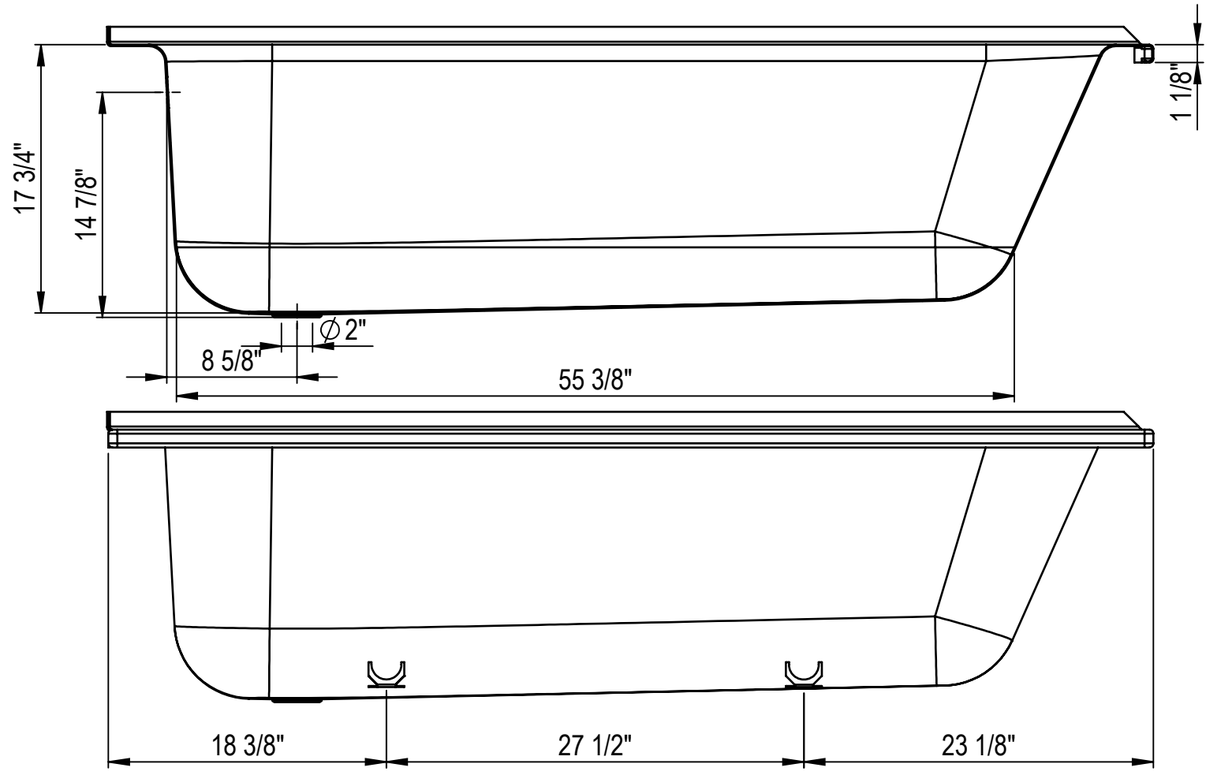

cut view B-B

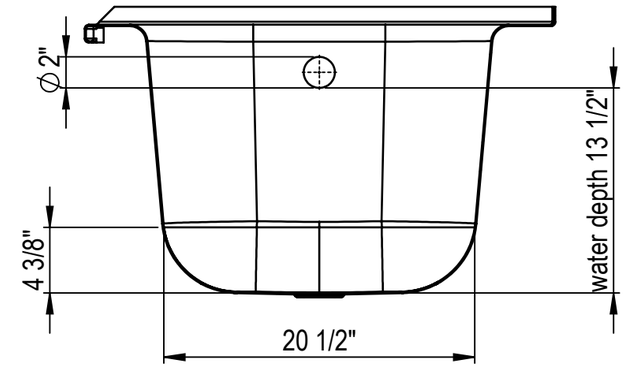

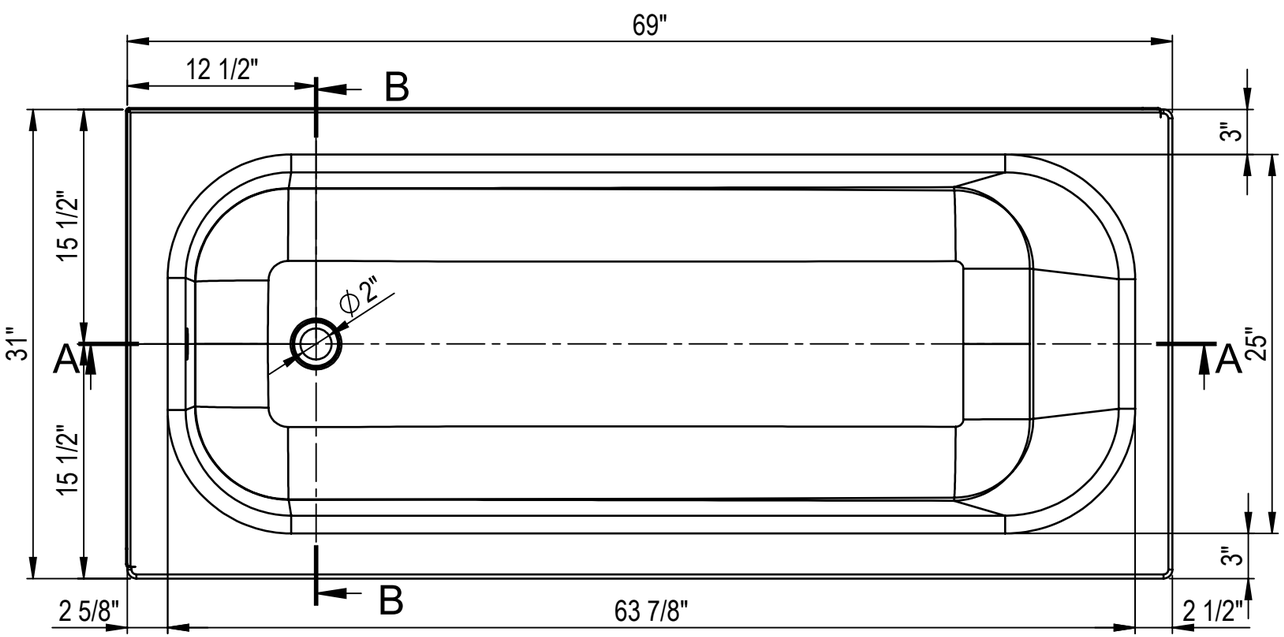

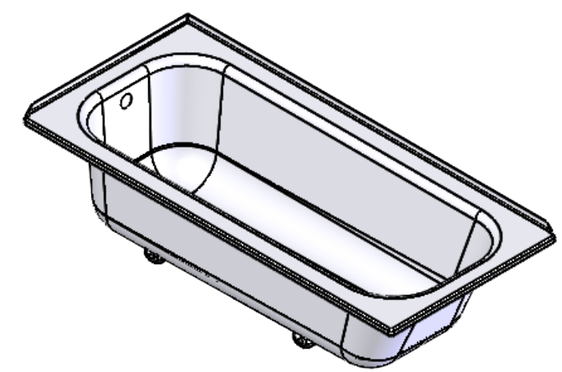

All products are made in the same factory with the same processes.
The steel grade and surface materials are identical.

Change	-	-	Change	-	-	replaced by	28.02.2023	LB	
	-	-		-	-			-	
	-	-		-	-			-	
	-	-		-	-				
Item no.	2247-0005			Scale					
release				1:10				Format	Sheet/Sheets
Order no.								A	4 / 9

Schmidlin
www.schmidlinusa.com

Schmidlin NORM
69"x31", Tile flange left/back, drain left

Drawing no. 01.4.0004240
Version

Plotdatum: 01.03.2023

CAD-System: SolidWorks

We reserves all rights in this document and it's subject matter. The recipient herby acknowledges these rights and assures the use of this document only for the purpose it was delivered. © Wilhelm Schmidlin AG