cut view A-A

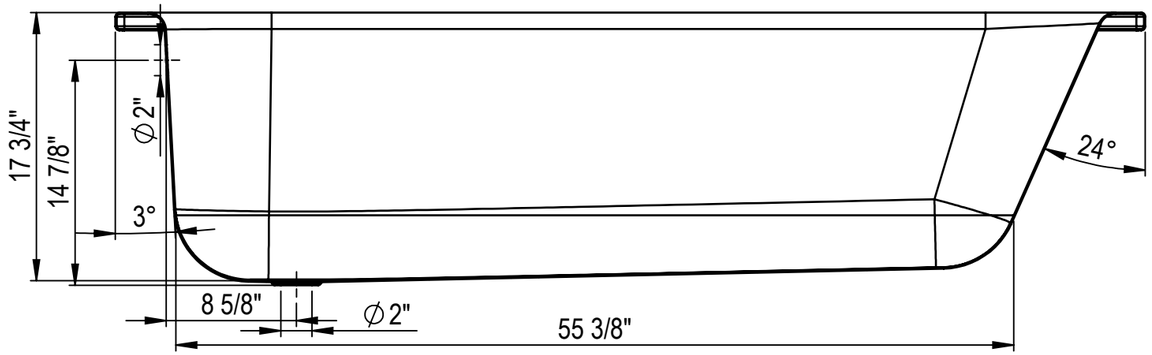

cut view B-B

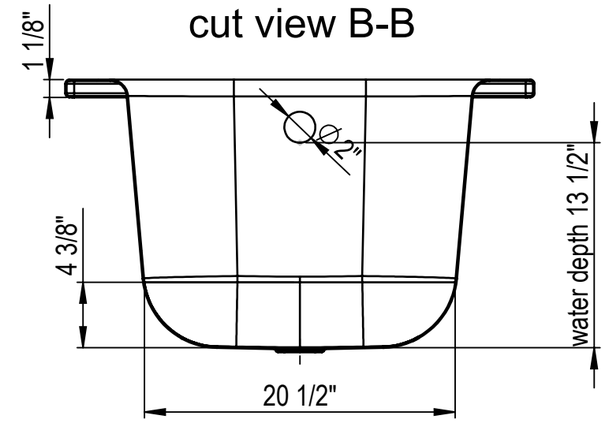

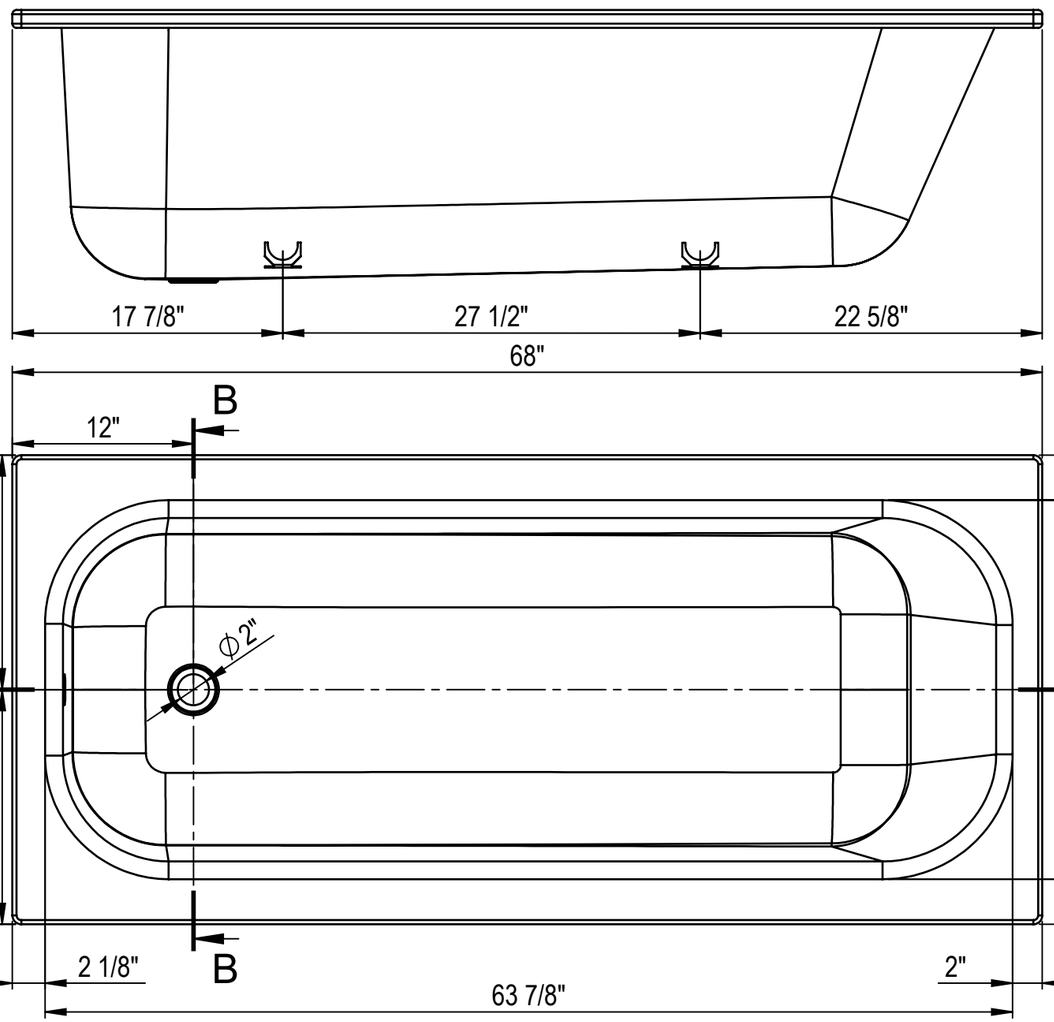

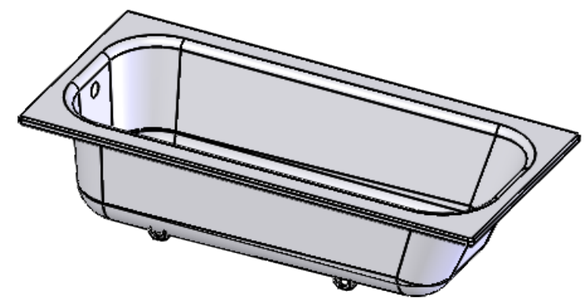

All products are made in the same factory with the same processes.
The steel grade and surface materials are identical.

Change	-	-	Change	-	-	replaced by	24.01.2023	LB
	-	-		-	-			-
	-	-		-	-			-
	-	-		-	-			
Item no.	2248-0002			Scale				
release				1:20			Format	Sheet/Sheets
Order no.							A	1 / 9

Schmidlin
www.schmidlinusa.com

Schmidlin NORM
68"x31"

Drawing no. 01.4.0003849
Version

CAD-System: SolidWorks

Plotdatum: 14.03.2023

We reserves all rights in this document and it's subject matter. The recipient herby acknowledges these rights and assures the use of this document only for the purpose it was delivered. © Wilhelm Schmidlin AG