We reserves all rights in this document and it's subject matter. The recipient herby acknowledges these rights and assures the use of this document only for the purpose it was delivered. © Wilhelm Schmidlin AG

A-A

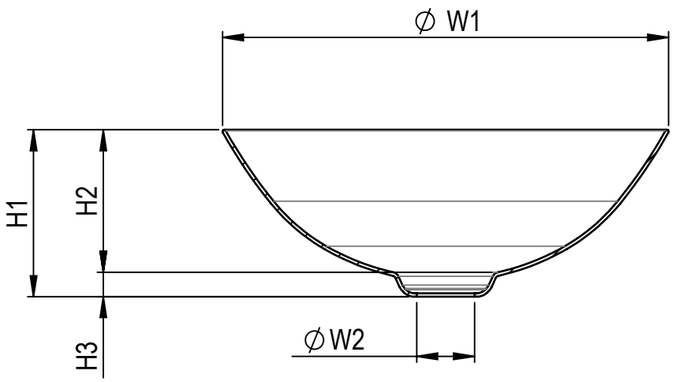

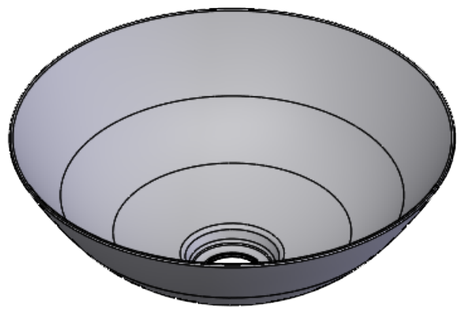

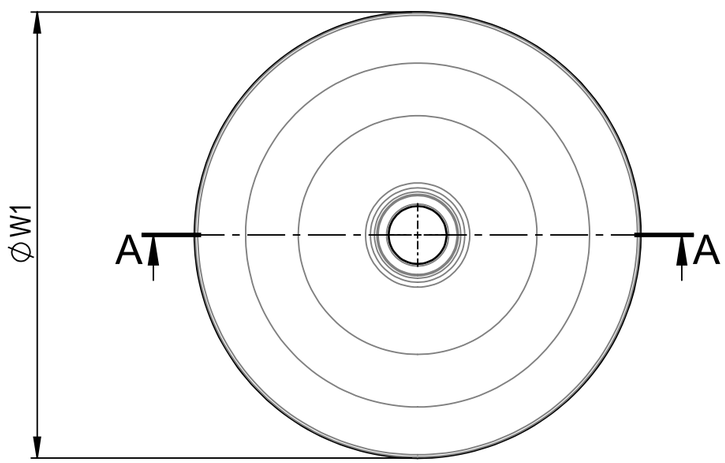

	2429-0001	
	mm	inch
W1	374	14 3/4
W2	48.5	1 7/8
H1	140	5 1/2
H2	120	4 3/4
H3	20	3/4

UPC certification pending
All products are made in the same factory with the same processes.
The steel grade and surface materials are identical.

Change			Change			replaced by		
	a	28.10.2019 LB Sichtkant		e	14.02.2024 LB Höhe 0.9		01.10.2019	LB
	b	12.11.2019 LB Loch 47,5		-	-			-
	c	24.02.2020 LB Loch 48,5		-	-			-
	d	14.04.2020 LB Zeich.Nr.		-	-			

Item no.	2429-0001	Scale			
release		1:5		Format	Sheet/Sheets
Order no.				A	3 / 5

Schmidlin
www.schmidlinusa.com

Schmidlin IRIS
14 3/4" x 5 1/2"

Drawing no. 01.1.0003432 Version e

CAD-System: SolidWorks

Plotdatum: 14.02.2024