Schmidlin DUETT FRAME

26 x 19 ½ x 35 inch

Article No: 2278-0012



Material

- Glazed titanium steel

Features

- with faucet hole bench

Colors

- ☐ C058 White matte
- ☐ C___ Color class III, IV, V, VI

↗ color list

Options

- ☐ FH2 3-hole faucet (4″)
- ☐ FH3 3-hole faucet (8″)
- ☐ CE1 CLEANEFFECT
- ☐ Custom round hole
- ☐ SDH2 Hole for Schmidlin built-in soap dispenser (Ø 1")
- ☐ FH1 Single hole faucet
- ☐ FH0 without faucet hole

Accessories

☐ 109547	Schmidlin ELEMENT, magnetic candle holder
☐ 108242	Schmidlin ELEMENT, magnetic glass holder
☐ 108243	Schmidlin ELEMENT, magnetic soap dish
☐ 108241	Schmidlin ELEMENT, magnetic soap dispenser
☐ 111479	Schmidlin MAGNO magnetic soapdispenser white
☐ 111480	Schmidlin MAGNO magnetic soapdispenser, black matte
☐ 111482	Schmidlin MAGNO magnetic toothbrush holder, black matte
☐ 111481	Schmidlin MAGNO magnetic toothbrush holder, white
☐ zub_Schmidlin Back- / side-splash	Schmidlin Back- / side-splash
☐ 1808-0003	Schmidlin DUETT FRAME Rahmen, schwarz matt
☐ 1808-0005	Schmidlin freestanding towelholder FRAME LINE 35"x19 1/2"x15 3/4"
☐ 1808-0006	Schmidlin ladder FRAME
☐ 100530	Schmidlin soap dispenser

11/23/2026 Subject to technical changes.

Wilhelm Schmidlin AG
Oberarth, Switzerland
info@schmidlinusa.com
www.schmidlinusa.com

Schmidlin DUETT FRAME

26 x 19 ½ x 35 inch

Article No: 2278-0012

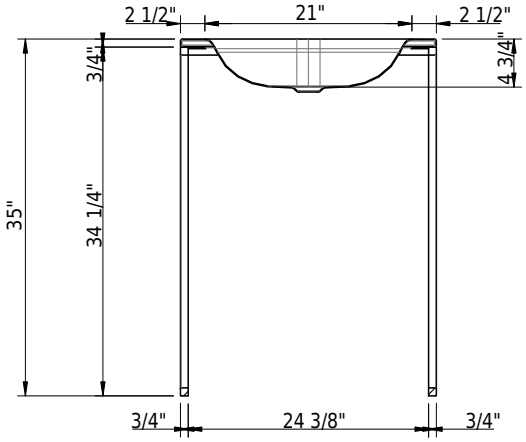

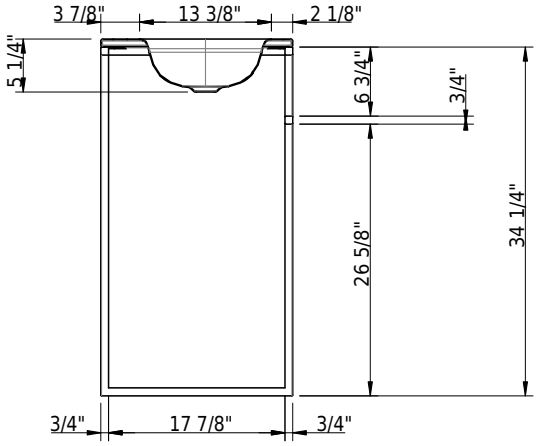

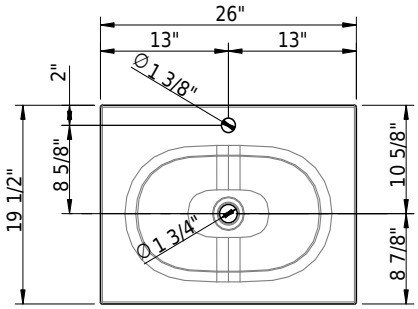

Technical Information

with faucet hole diameter	1 3/8"
Bowl configuration	single
Bowl depth	4 3/4"
Bowl size	13 3/8" x 21"
Drain hole diameter	1 3/4"

↗ Installation Instructions

Standards / Codes

- This product complies with
- ASME A112.19.1 / CSA B45.2
- ASTM F462

Notes

- This product does not have an overflow hole. Please use an open grid-drain
- Drain and faucet not included
- Refer to installation instructions
- We recommend the use of Schmidlin reinforcement flange for faucet installation

Important: Dimensions of fixtures are nominal and may vary within the range tolerances established by ANSI standard A112.19.4. These measurements are subject to change or cancellation. No responsibility is assumed for use of superseded or voided leaflet.

11/23/2026 Subject to technical changes.

Wilhelm Schmidlin AG
Oberarth, Switzerland
info@schmidlinusa.com
www.schmidlinusa.com