Schmidlin shower base super flat

48 x 36 x 1 ¼ inch
Article No: 2456-0003



Material

- Glazed titanium steel

Features

- Slip resistant surface ANTIGLISS included

Compatible drain fittings

- Schmidlin, ABS, 117240
- OS&B ABS, SD35
- OS&B PVC, SD5135
- Thrifco Plumbing, ABS 124-T
- PROFLO, Brass, Stainless Steel Cover PF140NC
- Watco PVC/ABS 9300

Variant no	Color	Tile flange	
☐ 2456-0002	C1 white gloss	TF00 no tile flange	
☐ 2456-0003	C1 white gloss	TF01 Tile flange on 3 sides, drain left	
☐ 2456-0004	C1 white gloss	TF02 Tile flange on 3 sides, drain right	
☐ 2456-0005	C1 white gloss	TF03 Tile flanges left / back, drain left	
☐ 2456-0006	C1 white gloss	TF04 Tile flanges right / back, drain right	

Colors

- ☐ C058 White matte
- ☐ C___ Color class III, IV, V, VI

↗ color list

Accessories

☐ 117005	Schmidlin 2-corner tape-flange, 155" (4m)
☐ 101196	Schmidlin mounting angle for tile flange (SIA 181), 4 pieces

Options

- ☐ CE1 CLEANEFFECT

11/23/2026 Subject to technical changes.

Wilhelm Schmidlin AG
Oberarth, Switzerland
info@schmidlinusa.com
www.schmidlinusa.com

Schmidlin shower base super flat

48 x 36 x 1 ¼ inch

Article No: 2456-0003

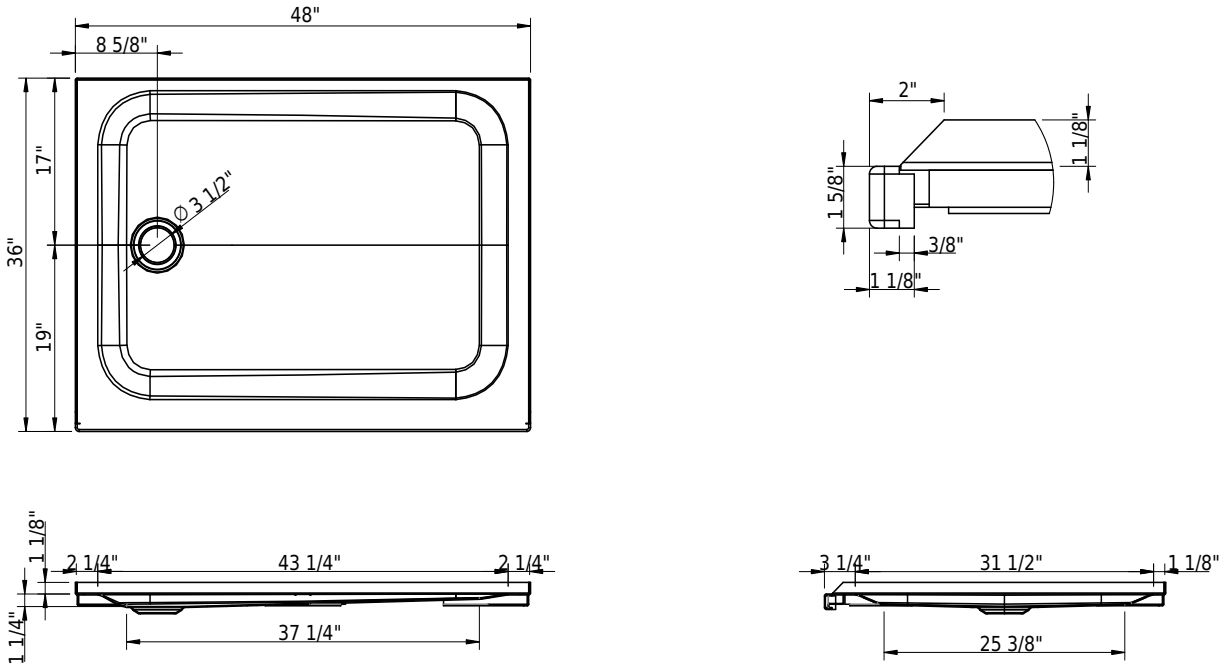

Technical Information

Installation	corner
Drain location	drain left
Weight	62 lbs
Drain opening	3 1/2"

↗ Installation Instructions

Standards / Codes

- This product complies with
- ASME A112.19.1 / CSA B45.2
- ASTM F462

Important: Dimensions of fixtures are nominal and may vary within the range tolerances established by ANSI standard A112.19.4. These measurements are subject to change or cancellation. No responsibility is assumed for use of superseded or voided leaflet.

individually swiss made

Wilhelm Schmidlin AG
Oberarth, Switzerland

info@schmidlinusa.com
www.schmidlinusa.com