Schmidlin FLAIR

62 ¼ x 26 ¾ x 16 inch
Article No: 2465-0002

Material

- Glazed titanium steel

Features

- ANTIGLISS included

Compatible drain fittings

- Geberit offset, ABS 151.604.21.1 (polished chrome)
- Geberit offset, PP 150.183.00.1 (rough-in unit)
- Mountain Plumbing offset, brass BDR20SBR45/FFF (cable drive)
- OS&B direct, brass 307DQ-25FFF (clicker)
- OS&B offset, brass 314Q13-20FFF (clicker)
- OS&B offset, PVC 5100QK-FFF (clicker)

Colors

- ☐ C058 White matte
- ☐ C___ Color class II, VI

↗ color list

Options

- ☐ ANTIGLISS PRO [GT01]
- ☐ CE1 CLEANEFFECT
- ☐ Soundsystem Schmidlin SOUNDBOX

Accessories

☐ 109547	Schmidlin ELEMENT, magnetic candle holder
☐ 101187	Schmidlin RELAX bathtub pillow, black, 1 piece
☐ HIGH_FIVE_50	Schmidlin HIGH FIVE 52
☐ HIGH_FIVE_Trio_50	Schmidlin HIGH FIVE 52 TRIO
☐ SPRING_50	Schmidlin SPRING 50
☐ Viega_Multiplex	Viega Multiplex
☐ Viega_Multiplex_Trio	Viega Multiplex Trio

07/09/2026 Subject to technical changes.

Wilhelm Schmidlin AG
Oberarth, Switzerland
info@schmidlinusa.com
www.schmidlinusa.com

Schmidlin™

Schmidlin FLAIR

62 ¼ x 26 ¾ x 16 inch
Article No: 2465-0002

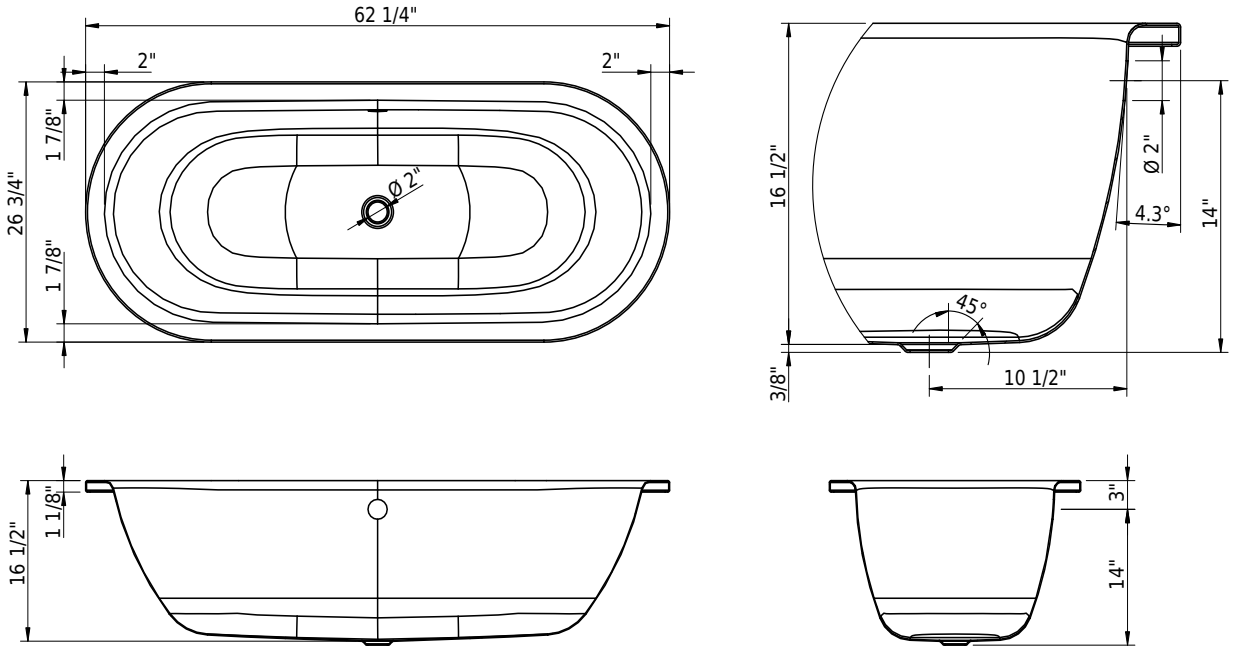

Technical Information

Installation location	drop-in / undermount
Weight without water	95 lbs
Water depth to overflow	12 1/2"
Max. water capacity to overflow	49 gal
Drain opening	2"
Overflow hole diameter	2"

↗ Installation Instructions

Standards / Codes

- This product complies with
- ASME A112.19.1 / CSA B45.2
- ASTM F462

Notes

- Drain set pre-installed
- Refer to installation instructions
- Bath faucet not included
- Refer to installation instructions

Important: Dimensions of fixtures are nominal and may vary within the range tolerances established by ANSI standard A112.19.4. These measurements are subject to change or cancellation. No responsibility is assumed for use of superseded or voided leaflet.

07/09/2026 Subject to technical changes.

Wilhelm Schmidlin AG
Oberarth, Switzerland
info@schmidlinusa.com
www.schmidlinusa.com