Schmidlin INOA20

72 x 32 x 19 ⅝ inch
Article No: 2631-0002



Material

- Glazed titanium steel

Features

- ANTIGLISS included
- Integrated tile flanges
- Option made to measure

Compatible drain fittings

- Geberit offset, PP 150.183.00.1 (rough-in unit)
- Mountain Plumbing offset, brass BDR20SBR45/FFF (cable drive)
- OS&B direct, brass 307DQ-30FFF (clicker)
- OS&B offset, brass 314Q15-20-FFFF (clicker)
- OS&B offset, ABS 6040QK-FFF (clicker)
- OS&B offset, PVC 5150QK-FFF (clicker)
- Watco offset, brass 551/552 - NY D4
- Watco offset, brass 538 D5 (cable-drive)
- Watco offset, brass 591 EX8 D8
- Watco offset, ABS/PVC 900 EX6 D8
- Watco offset, ABS/PVC 429 D9
- Watco offset, ABS/PVC 938 D2 (cable-drive)

Variant no	Color	Tile flange	
☐ 2631-0002	C1 white gloss	TF00 no tile flange	
☐ 2631-0003	C1 white gloss	TF01 Tile flange on 3 sides, drain left	
☐ 2631-0004	C1 white gloss	TF02 Tile flange on 3 sides, drain right	
☐ 2631-0005	C1 white gloss	TF03 Tile flanges left / back, drain left	
☐ 2631-0006	C1 white gloss	TF04 Tile flanges right / back, drain right	

11/23/2026 Subject to technical changes.

Wilhelm Schmidlin AG
Oberarth, Switzerland
info@schmidlinusa.com
www.schmidlinusa.com

Schmidlin™

Schmidlin INOA20

72 x 32 x 19 ⅝ inch

Article No: 2631-0002

Colors

- ☐ C058 White matte
- ☐ C___ Color class III,VI

↗ color list

Options

- ☐ CE1 CLEANEFFECT
- ☐ HC1 Handle CONTURA
- ☐ HS1 Handle SAFE
- ☐ HS2 Handle SAFE
- ☐ TF__ Tile flange

Accessories

☐ 109547	Schmidlin ELEMENT, magnetic candle holder
☐ 101188	Schmidlin RELAX Wannenkissen, schwarz, 2 Stück
☐ 101187	Schmidlin RELAX bathtub pillow, black, 1 piece
☐ 117005	Schmidlin 2-corner tape-flange, 155" (4m)
☐ 109810	Schmidlin adjustable installation feet (4 pieces)
☐ 116450	Schmidlin adjustable installation feet for Above floor Rough (4 pieces)
☐ 101196	Schmidlin mounting angle for tile flange (SIA 181), 4 pieces

11/23/2026 Subject to technical changes.

Wilhelm Schmidlin AG
Oberarth, Switzerland
info@schmidlinusa.com
www.schmidlinusa.com

Schmidlin™

Schmidlin INOA20

72 x 32 x 19 ⅝ inch

Article No: 2631-0002

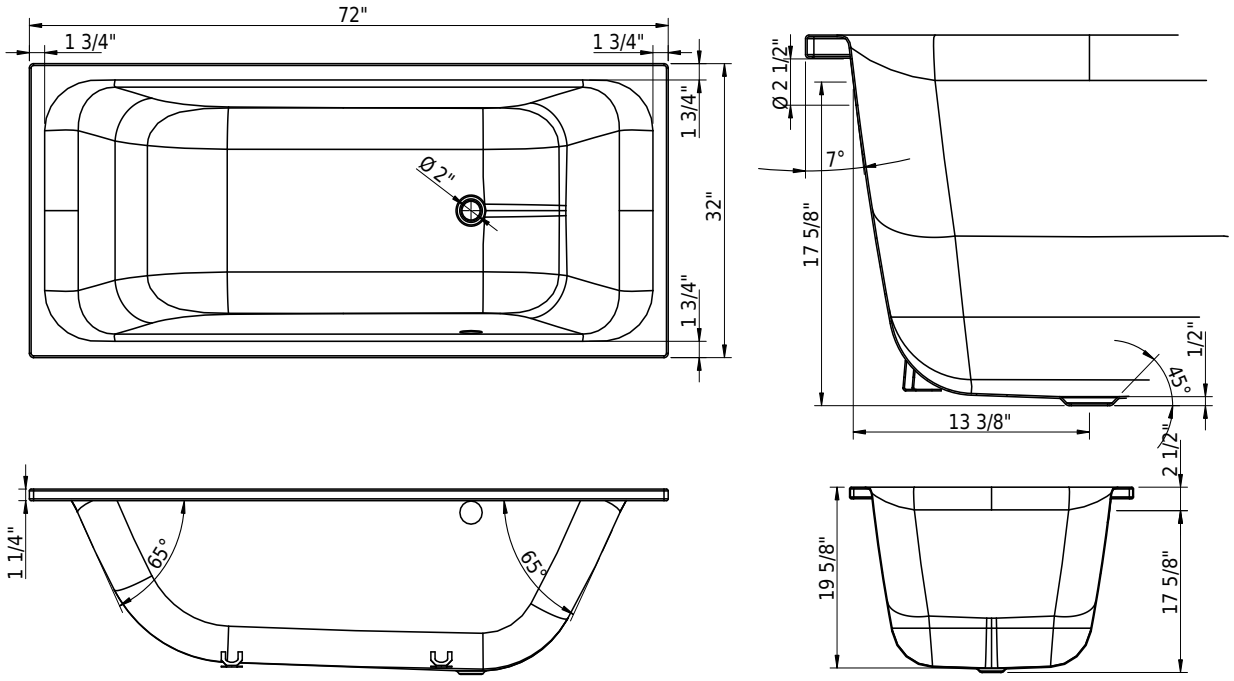

Technical Information

Installation location	drop in/undermount/alcove/corner
Weight without water	124 lbs
Water depth to overflow	15 7/8"
Max. water capacity to overflow	82 gal
Drain opening	2"
Overflow hole diameter	2 1/2"

↗ Installation Instructions

Standards / Codes

- This product complies with
- ASME A112.19.1 / CSA B45.2
- ASTM F462
- ADA

Notes

- Right hand outlet shown
- Bath faucet not included
- Refer to installation instructions
- We recommend the use of Schmidlin adjustable installation feet

Important: Dimensions of fixtures are nominal and may vary within the range tolerances established by ANSI standard A112.19.4. These measurements are subject to change or cancellation. No responsibility is assumed for use of superseded or voided leaflet.

11/23/2026 Subject to technical changes.

Wilhelm Schmidlin AG
Oberarth, Switzerland
info@schmidlinusa.com
www.schmidlinusa.com